Disclosure and photocopying of this document, exploitation and communication of its contents are not permitted, unless permission is expressly granted. All rights are reserved.

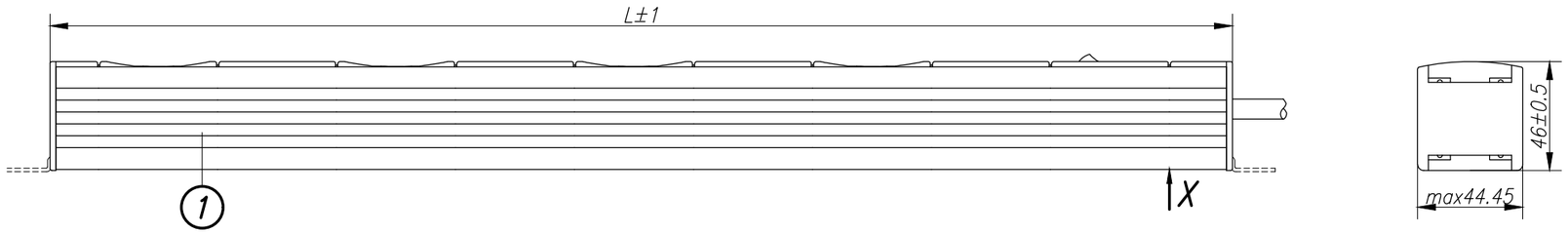

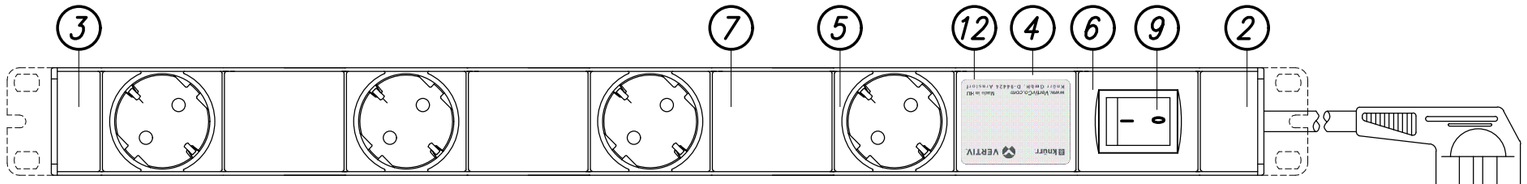

Internal wiring scheme, inlets and outlets shown frontside down

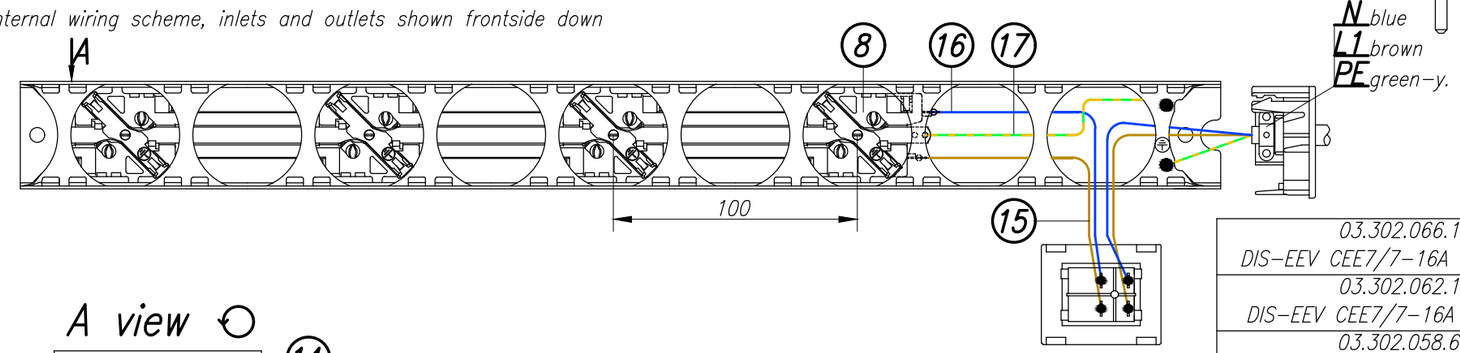

A view

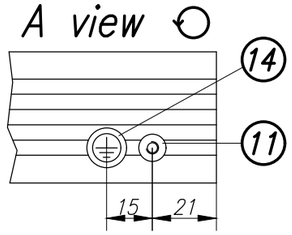

X view

assembly dimensions (only for information purposes)

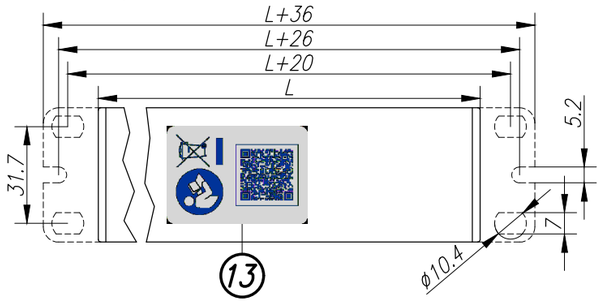

Example of label:

Type selection

Dawing no. Description	L (mm)	Color of chassis	No. of sockets	Gross weight (kg)	Net weight (kg)	External dimensions of packing box (mm)
03.302.066.1 DIS-EEV CEE7/7-16A 16P CLSW	1697	RAL7035 light grey	16	2,80	2,47	1745x65x90
03.302.062.1 DIS-EEV CEE7/7-16A 12 CLSW	1297	RAL7035 light grey	12	2,22	1,89	1345x65x90
03.302.058.6 DIS-EEV CEE7/7-16A 8P CLSW	897	RAL2003 pastel orange	8	170	1,45	985x60x75
03.302.058.1 DIS-EEV CEE7/7-16A 8P CLSW	897	RAL7035 light grey	8	1,70	1,45	985x60x75
03.302.054.6 DIS-EEV CEE7/7-16A 4P CLSW	497	RAL2003 pastel orange	4	1,09	0,91	580x60x75
03.302.054.1 DIS-EEV CEE7/7-16A 4P CLSW	497	RAL7035 light grey	4	1,09	0,91	580x60x75

15	1	ST	Vezeték barna 1,5mm2	Electric cord brown	3.768.4221	L=100(EO-EO)
16	1	ST	Vezeték kék 1,5mm2	Electric cord blue	3.768.2767	L=100(EO-EO)
17	1	ST	Vezeték zöld-sárga 1,5mm2	Electric cord green-yellow	3.768.2670	L=160(EO-EO)

A belső vezetékezés komponensei. / Components of internal wiring.

Technical data:
- DIN 49440 SCHUKO socket 16A
socket spacing 100mm, torsion of sockets 45°
- with lit switch, 2-pole switching
- Operating temperature: 0 ... +50 °C

Load rating:
100-240 Vac, 50-60 Hz
Input: 1x 16 A
Output: 16 A

Approvals/certificates:
- CE marking according to: LVD (low voltage directive), RoHS (restriction of hazardous substances)
- BV-BG certification (factory inspected)
- VDE-GS certification (factory inspected)

Power cord:
Type: H05VV-F 3x1,5mm², white
Lenght: 2,5m
Plug: CEE VII/7, DIN49441 Form2

Material/Finish:
Chassis: closed sheet steel extrusion, zincplated, powder-coated texture
Plastic parts: Vampamid 6 0024 VO (UL94) or similar, recyclable
Internal conduction: brass conductor rails and copper wires
Internal copper wires: H07V-K 1,5mm²

Color:
Chassis:
Plastic parts: RAL7035 light grey

Packaging:
Packing box (csomagolódoboz)
Supply schedule:
Socket strip (1 piece)
Mounting bracket (2 pieces) 3.768.2608
User manual (1 piece) 03.300.999.1

Dimensions in mm

Rev.	Change	Date	Name
B	18027	13.07.17	Gali

General tolerances: ISO 2768-m
Finish:
Material:
Sheet: 1/1

	Date	Name
Drawn	26.11.2007	Kovács
Checked	26.11.2007	Szabó
Approved		

Description: DIS-EEV CEE7/7-16A CLSW

Drawing no.: 03.302.054.X-066.X

Scale:

Gross weight: kg
Net weight: kg
External dimensions of packing box: mm

knürr®
Knürr GmbH Mariakirchener Straße 38
D-94424 Arnstorf Tel: +49 (0) 87 23-27-0

Platine:
File:

Weitergabe sowie Vervielfältigung dieser Unterlage, Verwertung und Mitteilung ihres Inhalts nicht gestattet, soweit nicht ausdrücklich zugestanden. Alle Rechte vorbehalten.

DI-STRIP